TABLE Ia. DEVICE DESCRIPTORS 1/

JPL PART NUMBER ST12252-	MFR. PART NUMBER	GENERIC PART NUMBER	DEVICE TYPE	PACKAGE STYLE 3/	ELECTRICAL PERFORMANCE CHARACTER-ISTIC	TERMINAL CONNECTIONS	ELECTRI-CAL TEST REQ'-MNTS	BURN-IN CIRCUIT
U02207C	XR-2207M	XR-2207	04 ADD-ON	GDIP1-T14 (14-PIN DIP)	TABLE Ib	FIGURE 1	TABLE II	FIGURE 2

NOTES: 1/ This drawing, in conjunction with CS515577 and MIL-M-38510/138 Class S, imposes all requirements for the procurement of these devices.

2/ Refer to MIL-M-38510/138.

3/ Refer to MIL-STD-1835.

4/ Screening shall be in accordance with MIL-M-38510/138 Class S, except that Table II herein shall be substituted for Table II of MIL-M-38510/138 Class S and MIL-M-38510/138 Table III for device type 04 add-on shall be derived using identified parameters fromTable Ib. Electrical Performance Characteristics and approved by JPL Section 514.

5. Each lot shall pass Group E, Subgroup 2 irradiation test to total irradiation dose (TID) of 100krads. The post-irradiation electrical test limits shall be those of Table III herein.

6. This standard takes precedence over documents referenced herein.

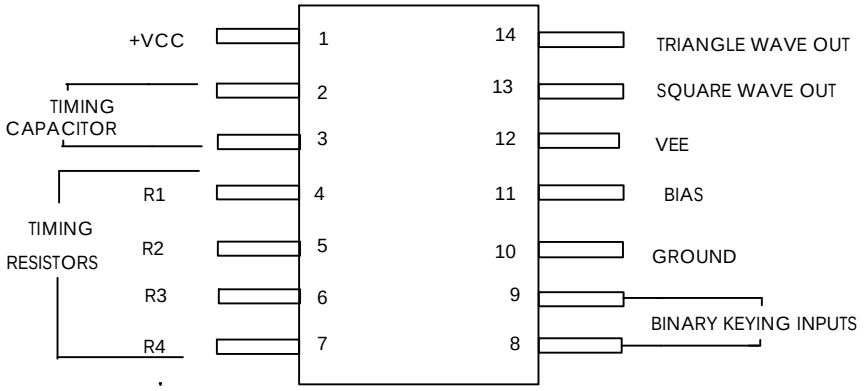

FIGURE 1. TERMINAL CONNECTIONS

RELEASED THRU SECTION 356 DATA MANAGEMENT:		DATE:
REVISION: A	APPROVED BY (Section 514):	DATE:

APPROVED SOURCE(S)

VENDOR PART NO.	VENDOR	JPL PART NO.
SEE TABLE Ia.	EXAR CORPORATION 2222 QUME DRIVE, SAN JOSE, CA 95161-9007	SEE TABLE Ia.

The item listed in the approved source block and identified by vendor name, address, and part number will be evaluated and tested by the JPL Electronic Parts Reliability Section or its delegated alternate before being approved for use. Non-JPL users shall check with the Electronic Parts Reliability Section on the status of the part's approval before using.

JET PROPULSION LABORATORY CALIFORNIA INSTITUTE OF TECHNOLOGY — CAGE NO. 23835

Procurement Specification: CS515577 Screening Specification: ZPP-2∅73-GEN	TITLE: MICROCIRCUIT, LINEAR, OSCILLATOR, VOLTAGE-CONTROLLED	DETAIL SPECIFICATION ST12252
Custodian: Electronic Parts Reliability Section 514		SHEET 1 OF 4

FILE: (Sec.514): F:\USERS\514\SPECS\ST12252A.DOC

TABLE Ib. ELECTRICAL PERFORMANCE CHARACTERISTICS

TEST CONDITIONS: Test Circuit of Figure 3, $V^+ = V^- = 6V$, $T_A = +25°C$, C = 5000pF, $R_1 = R_2 = R_3 = R_4 = 20K\Omega$, $R_L = 4.7\ K\Omega$, Binary Inputs grounded, S_1 and S_2 closed unless otherwise specified.

PARAMETERS	SYMBOL	CONDITIONS	LIMITS			UNITS
			MIN	TYP	MAX	
GENERAL SUPPLY CHARACTERISTICS						
VOLTAGE:	VCC					
SINGLE SUPPLY			8		26	V
SPLIT SUPPLIES		SEE FIGURE 3	±4		±13	
CURRENT:						
SINGLE SUPPLY:	ICC1/	Measured at pin 1, S_1 and S_2 open. See Figure 4.		5	8	mA
SPLIT SUPPLIES:						
POSITIVE:	ICC^+1/	Measured at pin 1, S_1, S_2 open.		5	8	
NEGATIVE:	ICC^-1/	Measured at pin 12, S_1, S_2 open.		4	7	
OSCILLATOR SECTION--FREQUENCY CHARACTERISTICS						
UPPER FREQUENCY LIMIT	f_H 1/	C = 500 pF, $R_3 = 2\ K\Omega$	0.5	1.0		MHz
LOWEST PRACTICAL FREQUENCY	f_L 1/	C = 50 µF, $R_3 = 2\ M\Omega$		0.01		Hz
FREQUENCY ACCURACY	f_A 1/			±1	±5	% of f_O
FREQUENCY MATCHING	f_{MATCH}			0.5		% of f_O
FREQUENCY STABILITY						
TEMPERATURE	$\Delta f/\Delta T$	$0°C < T_A < 70°C$		30		ppm/°C
POWER SUPPLY	$\Delta f/\Delta V$			0.15		%/V
SWEEP RANGE	1/	$R_3 = 1.5\ K\Omega$ fOR f_{H1}; $R_3 = 2\ M\Omega$for f_L; C = 5000 pF		1000: 1		f_H/f_L
SWEEP LINEARITY						
10:1 SWEEP		$f_H = 10$ kHz, $f_L = 1$ kHz		1.5		%
1000:1 SWEEP		$f_H = 100$ kHz, $f_L = 100$ Hz		5		%
FM DISTORTION		±10% FM Deviation		0.1		%
RECOMMENDED RANGE OF TIMING RESISTORS			1.5		2000	KΩ
IMPEDANCE AT TIMING PINS		Measured at pins 4, 5, 6 or 7.		75		Ω
DC LEVEL AT TIMING TERMINALS		Measured at pins 4, 5, 6, or 7.		10		mV
BINARY KEYING INPUTS						
SWITCHING THRESHOLD	1/	Measured at pins 8 and 9, Referenced to pin 10.	1.4	2.2	2.8	V
INPUT IMPEDANCE				5		KΩ
OUTPUT CHARACTERISTICS						
TRIANGLE OUTPUT		Measured at pin 13.				
AMPLITUDE	1/	$V_{CC} = \pm 6V$, $I_O = 0$	4	6		Vpp
IMPEDANCE				10		Ω
DC LEVEL	1/	Referenced to pin 10.		+100		mV
LINEARITY		From 10% to 90% of f_O swing.				
SQUARE WAVE OUTPUT		Measured at pin 13, S_2 closed				
AMPLITUDE	1/		11	12		Vpp
SATURATION VOLTAGE	1/	Referenced to pin 12.		0.2	0.4	V
RISE TIME	1/	$C_L \leq 10$ pF		200		nsec
FALL TIME	1/	$C_L \leq 10$ pF		20		nsec

NOTES: 1/ These parameters are identified for screening

TABLE II. ELECTRICAL TEST REQUIREMENTS

TEST	SUBGROUPS (PER MIL-STD-883, METHOD 5005 TABLE I
PRE BURN-IN	1,7
POST BURN-IN	1, 2, 3, 4, 7
DELTA CALCULATIONS	1/
GROUP END POINTS	1, 2, 3, 4, 7

NOTES: 1/ Parameter delta calculations shall be performed with reference to the previous respective electrical measurement. The parameter delta limits shall be: $\Delta I_{CC} \leq \pm 10\%$; Δtriangle-wave-amplitude-peak-to-peak $\leq \pm 10\%$; Δ square-wave-amplitude-peak-to-peak $\leq \pm 10\%$.

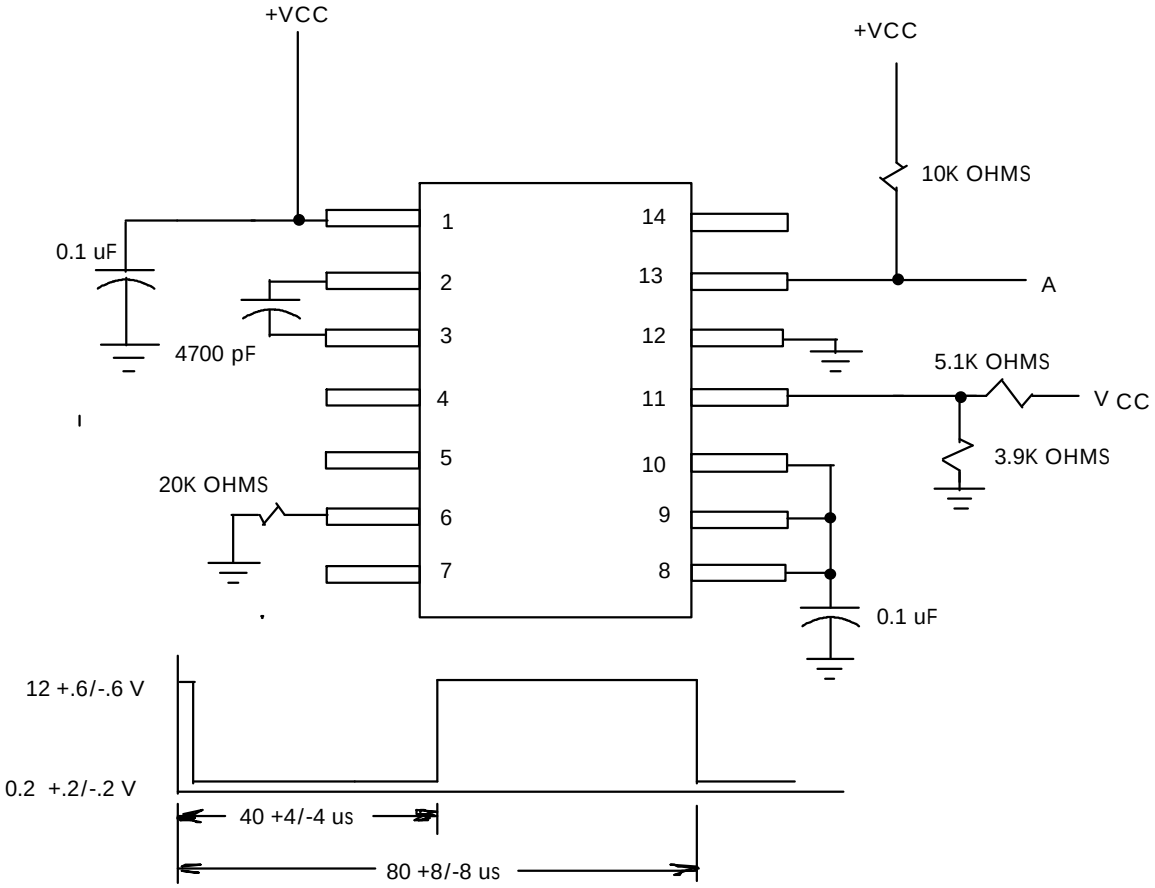

CHECK POINT A WAVEFORM

Vcc = +12Vdc +5%/-5%

All resistors are 1/2 W +5%/-5%.

Capacitors are +10%/-10%.

FIGURE 2. BURN-IN CIRCUIT

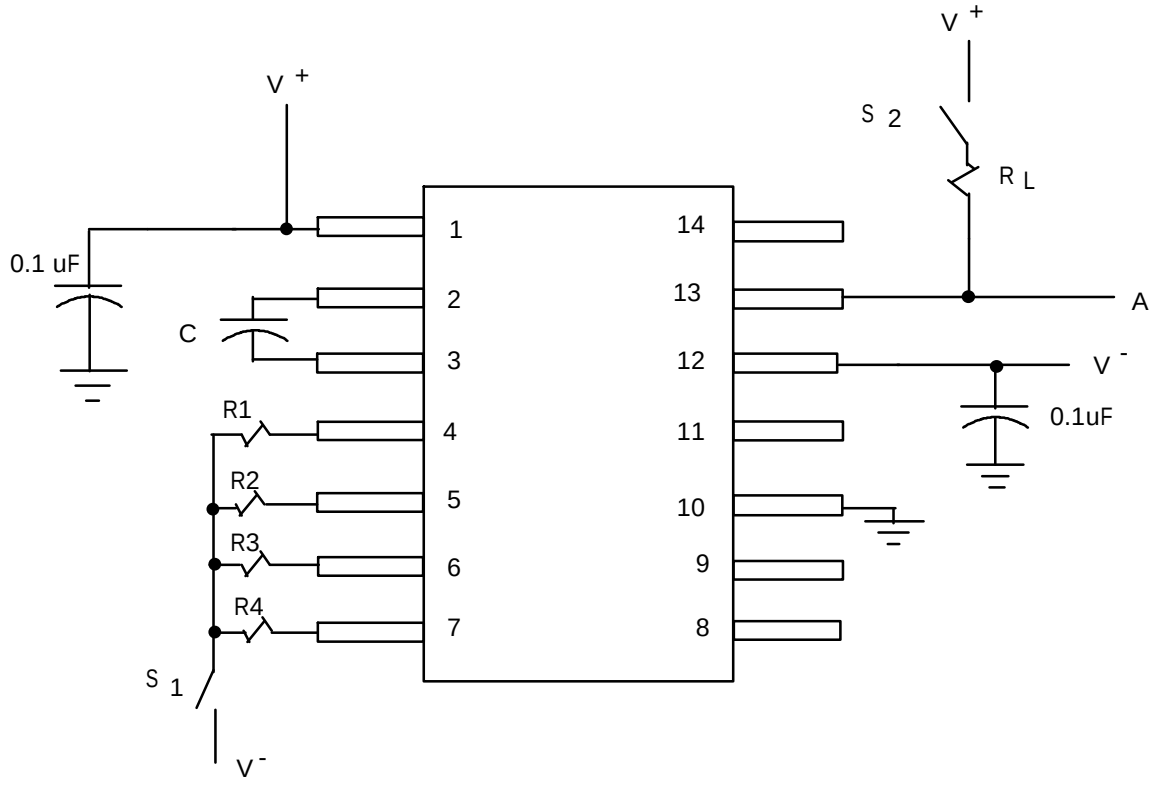

FIGURE 3. TEST CIRCUIT FOR SPLIT SUPPLY OPERATION

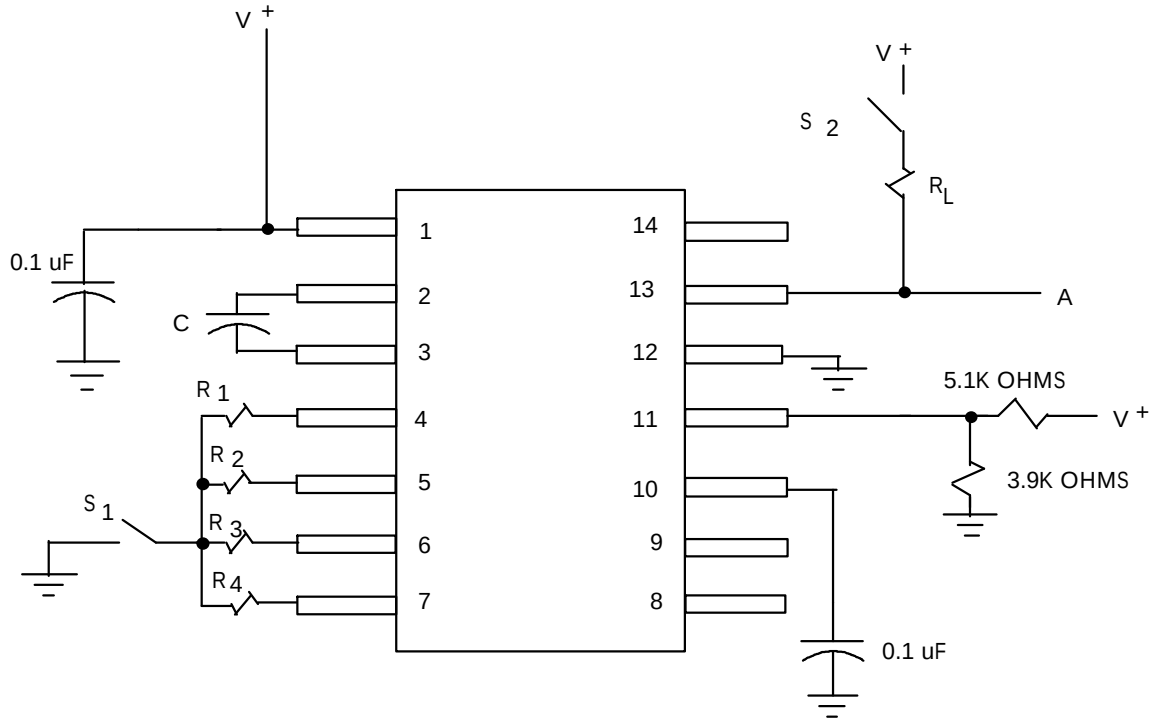

FIGURE 4. TEST CIRCUIT FOR SINGLE SUPPLY OPERATION

JET PROPULSION LABORATORY		CALIFORNIA INSTITUTE OF TECHNOLOGY		
ST	REV.	TITLE: MICROCIRCUIT, LINEAR, OSCILLATOR, VOLTAGE-CONTROLLED	ST12252	REV. A
SHEET 4 OF 4			SHEET OF	